Single Color LED Controller

Codice: 115235

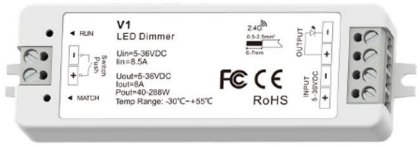

Features

- 4096 levels 0-100% dimming smoothly without any flash.
- Match with RF 2.4G single zone or multiple zone dimming remote control.
- One RF controller accept up to 10 remote control.
- Auto-transmitting function: Controller automatically transmit signal to another controller with 30m control distance.
- Synchronize on multiple number of controllers.
- Connect with external push switch to achieve on/off and 0-100% dimming function.
- Light on/off fade time 3s selectable.
- Over-heat / Over-load / Short circuit protection, recover automatically.

Technical Parameters

Input and Output	
Input voltage	5-36VDC
Input current	8.5A
Output voltage	5-36VDC
Output current	1CH,8A
Output power	40W/96W/192W/288W (5V/12V/24V/36V)
Output type	Constant voltage

Safety and EMC	
EMC standard (EMC)	ETSI EN 301 489-1 V2.2.3 ETSI EN 301 489-17 V3.2.4
Safety standard(LVD)	EN 62368-1:2020+A11:2020
Radio Equipment(RED)	ETSI EN 300 328 V2.2.2
Certification	CE,EMC,LVD,RED

Weight	
Net weight	0.041kg
Gross weight	0.052kg

Dimming data	
Input signal	RF 2.4GHz + Push Dim
Control distance	30m(Barrier-free space)
Dimming gray scale	4096 (2^12) levels
Dimming range	0-100%
Dimming curve	Logarithmic
PWM frequency	2000Hz (default)

Environment	
Operation temperature	Ta: -30°C ~ +55°C
Case temperature (Max.)	Tc: +85°C
IP rating	IP20

Warranty and Protection	
Warranty	5 years
Protection	Reverse polarity Over-heat Over-load Short circuit

Mechanical Structures and Installations

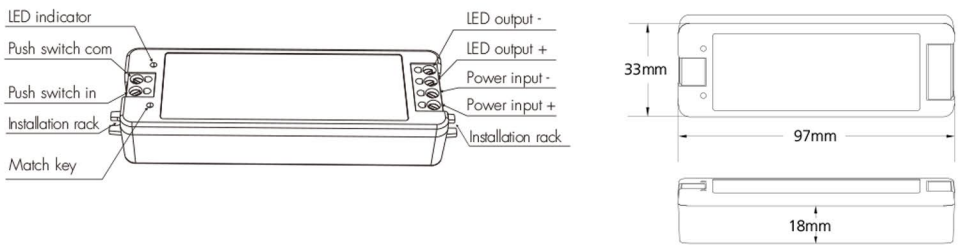

Wiring Diagram

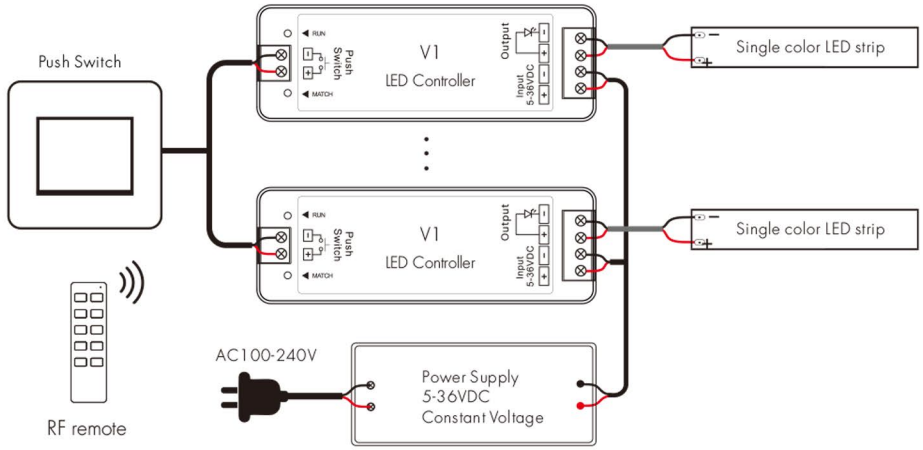

Match Remote Control (two match ways)

End user can choose the suitable match/delete ways. Two options are offered for selection:

Use the controller's Match key

Match:
Short press match key, immediately press on/off key (single zone remote) or zone key (multiple zone remote) on the remote.
The LED indicator fast flash a few times means match is successful.

Delete:
Press and hold match key for 5s to delete all match,
The LED indicator fast flash a few times means all matched remotes were deleted.

Use Power Restart

Match:
Switch off the power of the receiver, then switch on power. Repeat again.
Immediately short press on/off key (single zone remote) or zone key (multiple zone remote) 3 times on the remote.
The light blinks 3 times means match is successful.

Delete:
Switch off the power of the receiver, then switch on power. Repeat again.
Immediately short press on/off key (single zone remote) or zone key (multiple zone remote) 5 times on the remote.
The light blinks 5 times means all matched remotes were deleted.

LED AND LIGHT E' UN MARCHIO CIMEE ELETTRONICA S.R.L
Via Vincenzo Monti, 29 - 20016 Pero (MI)
Tel. +39 02 38007942 - Fax. +39 02 38000657 - P.I 07058870150
www.ledandlight.it - info@ledandlight.it

Application notes

1. All the receivers in the same zone.

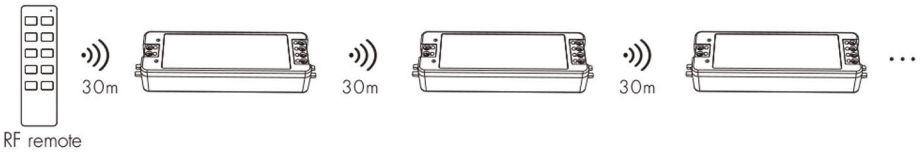

Auto-transmitting: One receiver can transmit the signals from the remote to another receiver within 30m, as long as there is a receiver within 30m, the remote control distance can be extended.
Auto-synchronization: Multiple receivers within 30m distance can work synchronously when they are controlled by the same remote.
Receiver placement may offer up to 30m communication distance. Metals and other metal materials will reduce the range.
Strong signal sources such as WiFi routers and microwave ovens will affect the range.
We recommend for indoor applications that receiver placements should be no further apart than15m.

2. Each receiver(one or more) in a different zone, like zone 1, 2, 3 or 4.



Push Dim Function

The provided Push-Dim interface allows for a simple dimming method using commercially available non-latching (momentary) wall switchs.

- **Short press:**
  Turn on or off light.
- **Long press (1-6s):**
  Press and hold to step-less dimming,
  With every other long press, the light level goes to the opposite direction.
- **Dimming memory:**
  Light returns to the previous dimming level when switched off and on again, even at power failure.
- **Synchronization:**
  If more than one controller are connected to the same push switch, do a long press for more than 10s, then the system is synchronized and all lights in the group dim up to 100%.
  This means there is no need for any additional synchrony wire in larger installations.
  We recommend the number of controllers connected to a push switch does not exceed 25 pieces,
  The maximum length of the wires from push to controller should be no more than 3,5 meters.

Dimming Curve

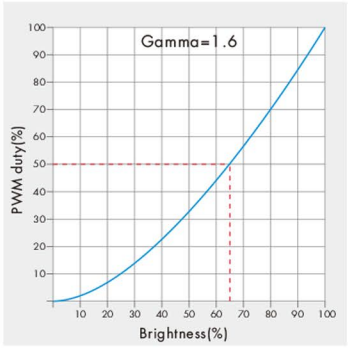

Light on/off fade time

Long press match key 5s, then short press match key 3 times, the light on/off time will be set to 3s, the indicator light blink 3 times.

Long press match key 10s, restore factory default parameter, the light on/off time also restore to 0.5s.

Malfunctions Analysis & Troubleshooting

Malfunctions	Causes	Troubleshooting
No light	1. No power. 2. Wrong connection or insecure.	1. Check the power. 2. Check the connection.
Uneven intensity between front and rear,with voltage drop	1. Output cable is too long. 2. Wire diameter is too small. 3. Overload beyond power supply capability. 4. Overload beyond controller capability.	1. Reduce cable or loop supply. 2. Change wider wire. 3. Replace higher power supply. 4. Add power repeater.
No response from the remote	1. The battery has no power. 2. Beyond controllable distance. 3. The controller did not match the remote.	1. Replace battery. 2. Reduce remote distance. 3. Re-match the remote.

LED AND LIGHT E' UN MARCHIO CIMEE ELETTRONICA S.R.L
Via Vincenzo Monti, 29 - 20016 Pero (MI)
Tel. +39 02 38007942 - Fax. +39 02 38000657 - P.I 07058870150
www.ledandlight.it - info@ledandlight.it